Parts Catalog

Model: FUR060145M801ESNCXFN

Exploded View

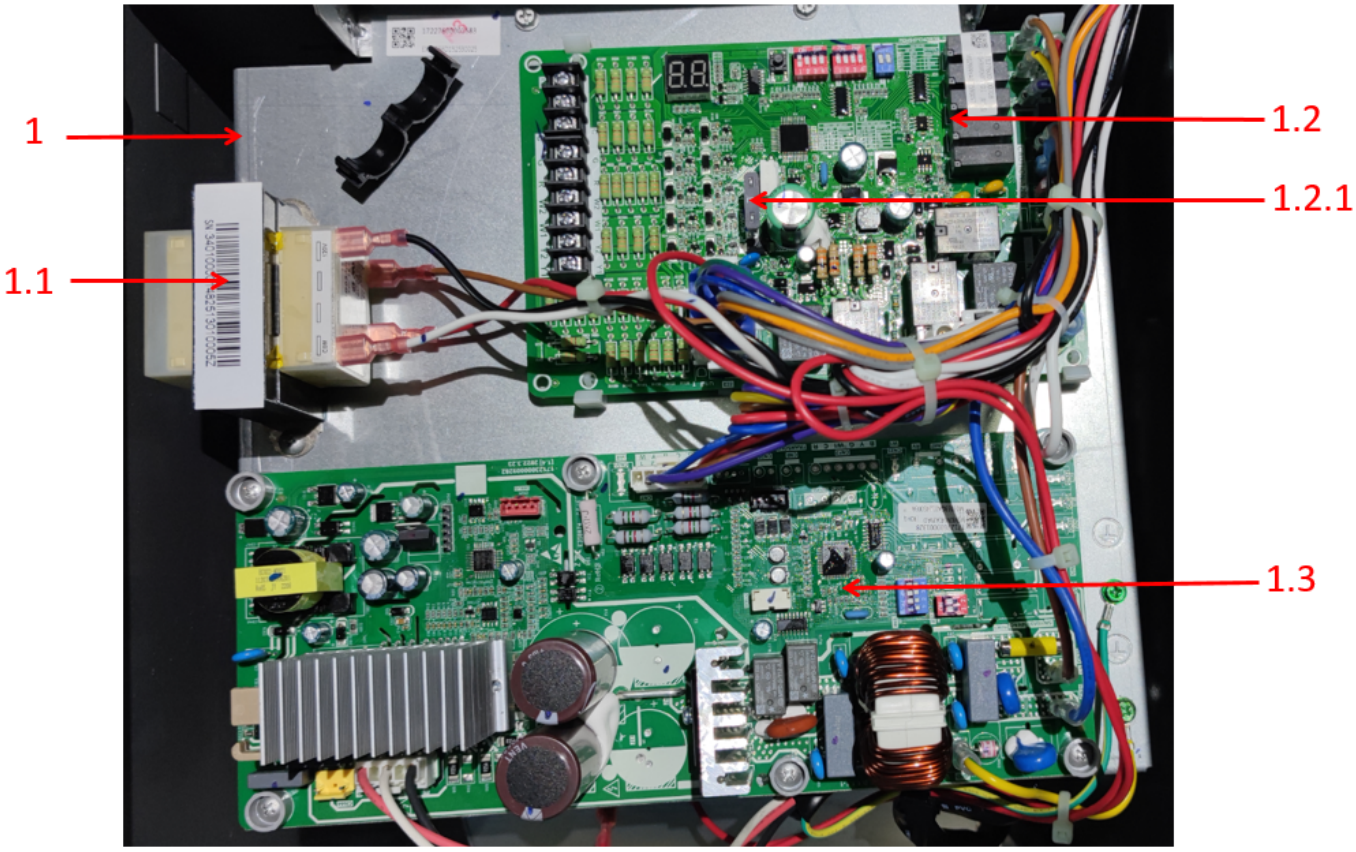

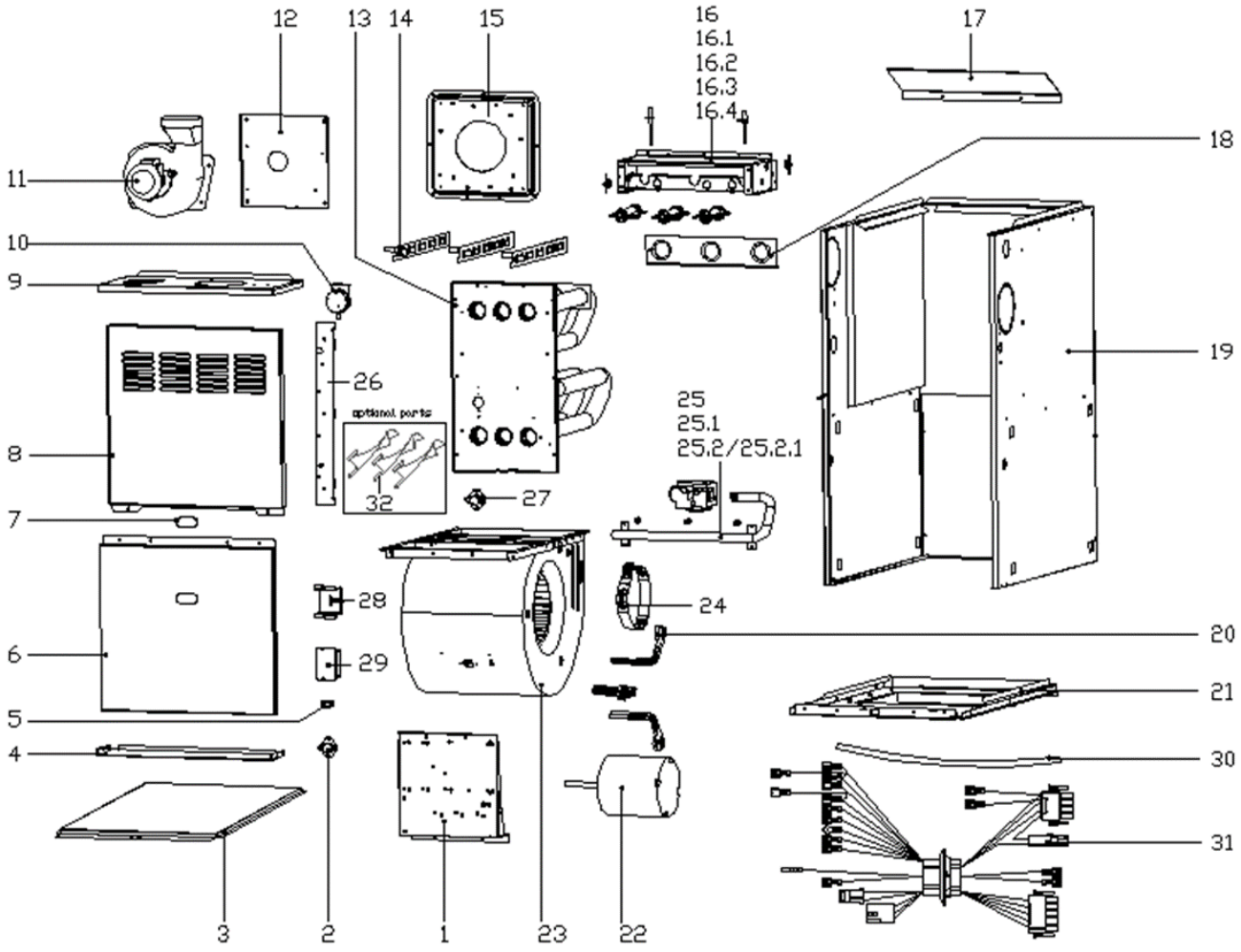

Spare Parts

Item #	Spare Parts Code	Part Name (EN)
1	17227600002303	E-part box assembly
1.1	11203103000197	Linear Transformer
1.2	17127600002288	Main Control Board
1.3	17127600A00121	Gas furnace, Main control board assembly
2	17400513002815	Thermostat
3	12227600000103	Blockoff Plate
4	12227600A01407	Support plate assembly
5	17427600001148	Door Switch
6	12227600A01415	Cover
7	12127600000009	Transparent Plastic Cover
8	12227600A01432	Cover

Item #	Spare Parts Code	Part Name (EN)
9	12227600A01393	Cover assembly
10	17400515000421	Air Differential Pressure Switch
11	17400801000223	Combustion Blower And Motor Assembly
12	12227600000012	Exhaust Baffles
13	15727600000008	Heat Exchanger Tube Bundle
14	12227600000058	Spoiler
15	12227600000236	Blockoff Plate
16	12227600002762	Burner Assembly
16.1	11201006000010	Special Sensor
16.2	17427600000007	Lgnition Needle
16.3	17400513000045	Thermostat
16.4	17427600000005	Burner
17	12227600000019	Blockoff Plate
18	12227600000229	Baffle
19	12227600A01423	Cabinet Components
20	12223000001934	Motor Holder Assembly
21	12227600004106	Partition board ass'y
22	11002015016399	Brushless DC Motor
23	12200102000019	Centrifugal Fan
24	12223000001992	Motor Holder
25	15427600000121	Gas Pipe Assembly
25.1	17427600001389	Gas Valve
25.2	15427600000120	Gas Pipe Assembly
25.2.1	15527600000001	Copper Nozzle
26	12227600004100	Support plate assembly
27	17400513003815	Thermostat
28	12227600000818	Junction Box
29	12227600000817	Junction Box Cover
30	12627600000008	Silicone Tube
31	17401203023509	Strong Electric Cable Group