Parts Catalog

Model: FUR100021M801ESNCXFN

Exploded View

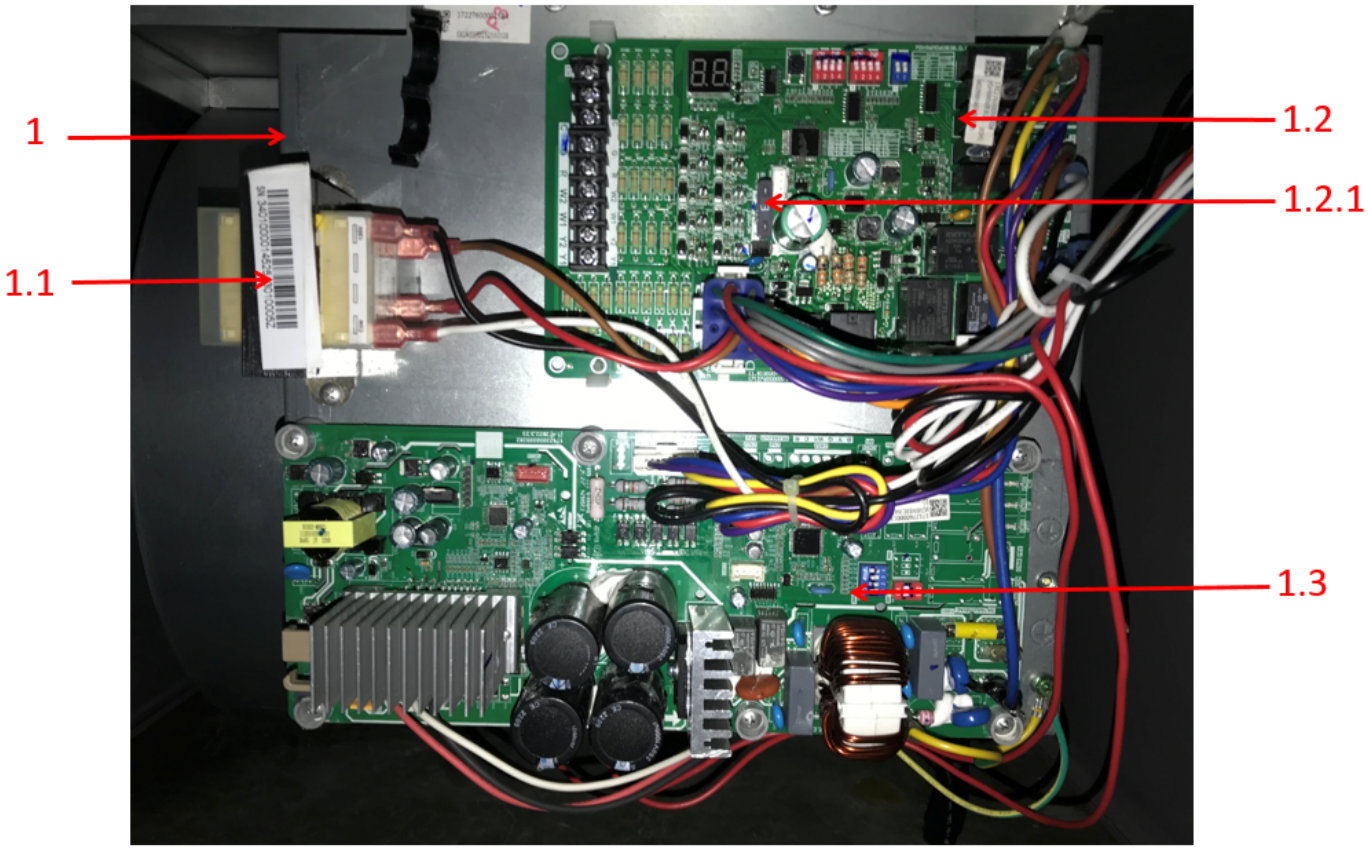

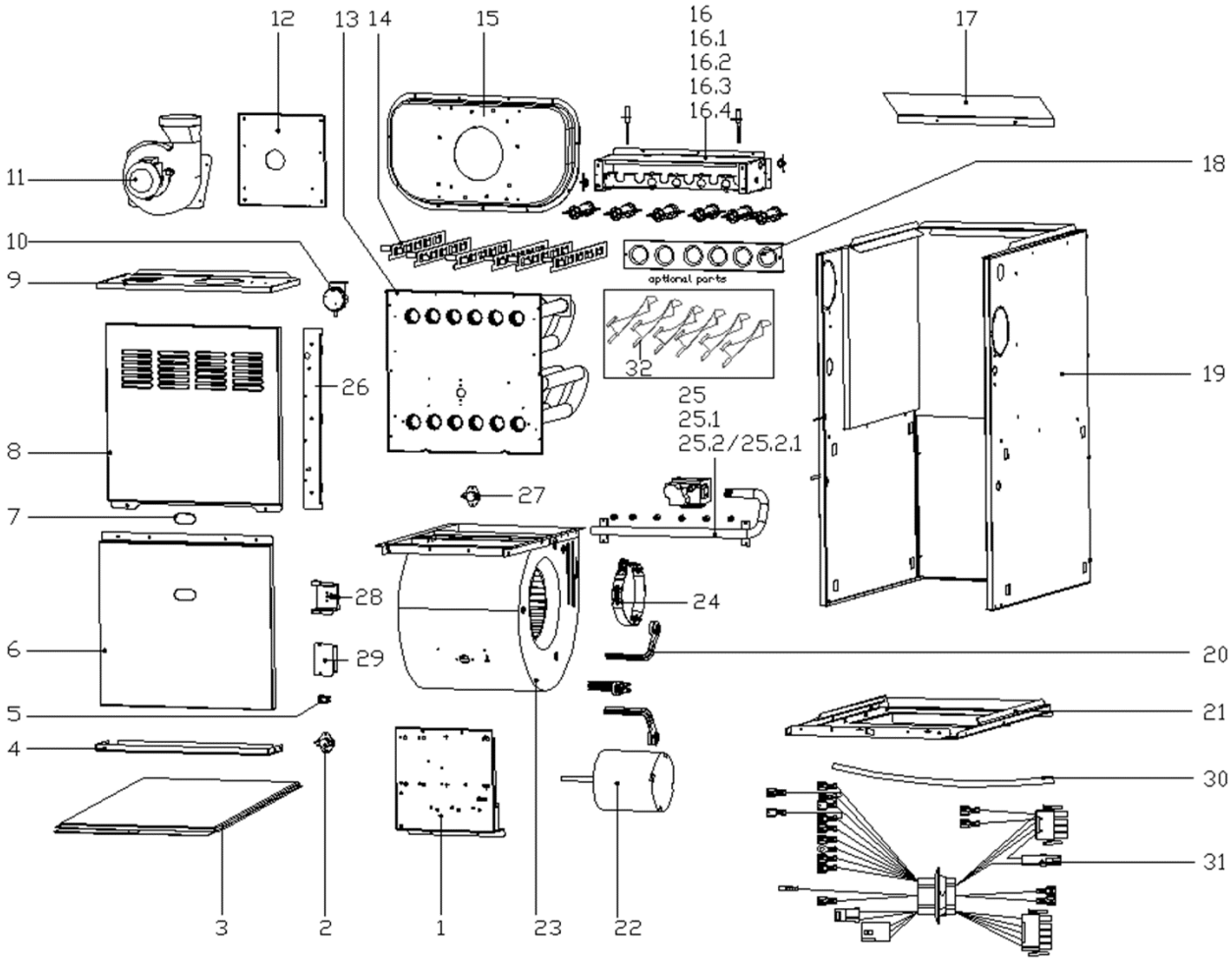

Spare Parts

Item #	Spare Parts Code	Part Name (EN)
1	17227600002323	E-part box assembly
1.1	11203103000197	Linear Transformer
1.2	17127600002288	Main Control Board
1.3	17127600A00081	Gas furnace, Main control board assembly
2	17400513002815	Thermostat
3	12227600000101	Blockoff Plate
4	12227600A01400	Support plate assembly
5	17427600001148	Door Switch
6	12227600A01378	Cover
7	12127600000009	Transparent Plastic Cover
8	12227600A01362	Cover
9	12227600A01406	Cover assembly

Item #	Spare Parts Code	Part Name (EN)
10	17400515000421	Air Differential Pressure Switch
11	17400801000223	Combustion Blower And Motor Assembly
12	12227600000242	Exhaust Baffles
13	15727600000004	Heat Exchanger Tube Bundle
14	12227600000058	Spoiler
15	12227600000237	Blockoff Plate
16	12227600002763	Burner Assembly
16.1	11201006000010	Special Sensor
16.2	17427600000007	Lgnition Needle
16.3	17400513000045	Thermostat
16.4	17427600000005	Burner
17	12227600000020	Blockoff Plate
18	12227600000226	Baffle
19	12227600A01429	Cabinet Assembly
20	12223000001932	Motor Holder Assembly
21	12227600004105	Partition board ass'y
22	11002015016398	Brushless DC Motor
23	12200102000021	Centrifugal Fan
24	12223000001992	Motor Holder
25	15427600000106	Gas Pipe Assembly
25.1	17427600001389	Gas Valve
25.2	15427600000103	Gas Pipe Assembly
25.2.1	15527600000003	Copper Nozzle
26	12227600004100	Support plate assembly
27	17400513003815	Thermostat
28	12227600000818	Junction Box
29	12227600000817	Junction Box Cover
30	12627600000010	Silicone Tube
31	17401203023509	Strong Electric Cable Group