Parts Catalog

Model: FUR100021U962ESNCXFN

Exploded View

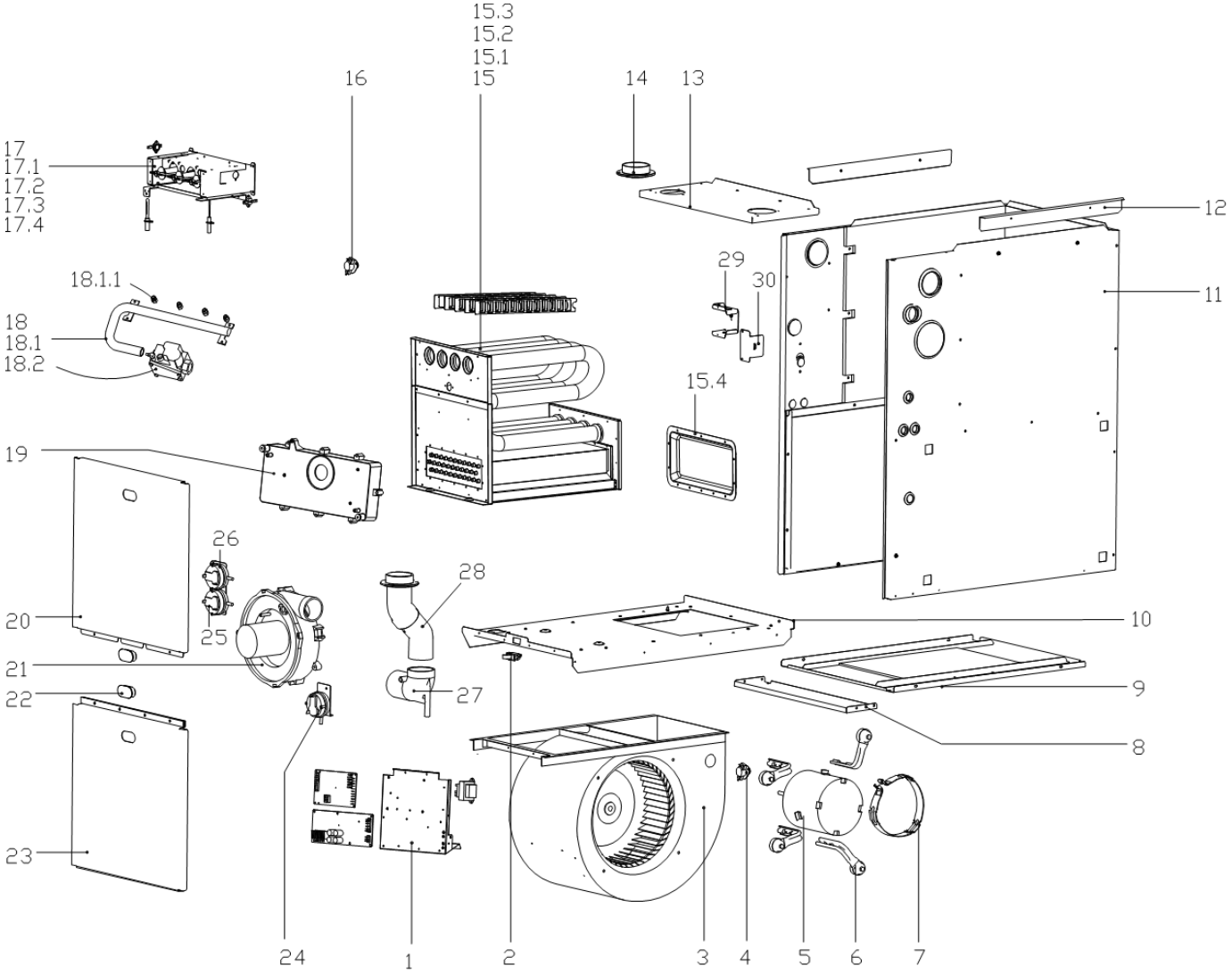

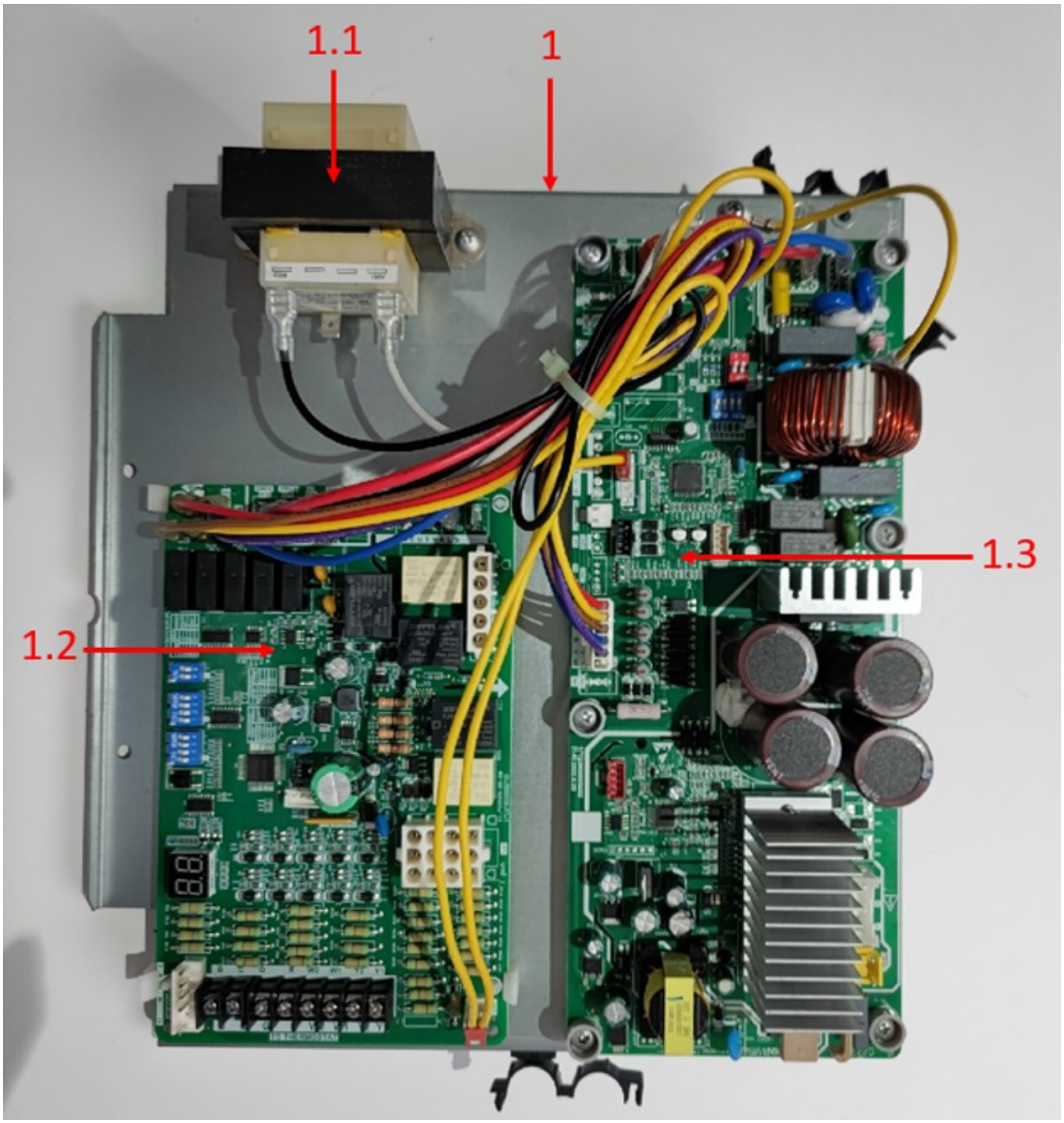

Spare Parts

Item #	Spare Parts Code	Part Name (EN)
1	17227600002143	E-part box assembly
1.1	11203103000197	Linear Transformer
1.2	17127600001869	Gas furnace, Main control board assembly
1.3	17127600A00081	Gas furnace, Main control board assembly

Item #	Spare Parts Code	Part Name (EN)
2	17427600001148	Door Switch
3	12200102000031	Centrifugal Fan
4	17400513000874	Thermostat
5	11002015016398	Brushless DC Motor
6	12223000001933	Motor Holder Assembly
7	12223000001993	Motor Holder
8	12227600A01383	Support Plate
9	12227600000819	Blockoff Plate Assembly
10	12227600004601	Partition Plate Assembly
11	12227600A01401	Cabinet assembly
12	12227600000274	Support Bar Assembly
13	12227600A01385	Cover assembly
14	12127600000010	Connector
15	15727100000710	Heat exchanger assembly
15.1	15727600000013	Tube Components
15.2	15827600000051	Secondary heat exchanger assembly
15.3	12227600000059	Spoiler
15.4	12227600000235	Gas Collecting Cover
16	17400513001114	Thermostat
17	12227600001402	Burner Assembly
17.1	17400513000045	Thermostat
17.2	17427600000007	Lgnition Needle
17.3	11201006000010	Special Sensor
17.4	17427600000004	Burner
18	15427600000061	Gas Pipe Assembly
18.1	15427600000006	Gas Pipe Assembly
18.1.1	15527600000001	Copper Nozzle
18.2	17427600001389	Gas Valve
19	12127600000932	Drainage pan assembly
20	12227600A01386	Cover assembly
21	17400801010488	Exhaust fan components
22	12127600000009	Transparent Plastic Cover
23	12227600A01411	Cover assembly

Item #	Spare Parts Code	Part Name (EN)
24	17400515000016	Air Differential Pressure Switch
25	17400515000420	Air Differential Pressure Switch
26	17400515000421	Air Differential Pressure Switch
27	12127600000015	Smoke Exhaust Elbow
28	12127600000016	Smoke Exhaust Pipe Joint Assembly
29	12227600000818	Junction Box
30	12227600000817	Junction Box Cover